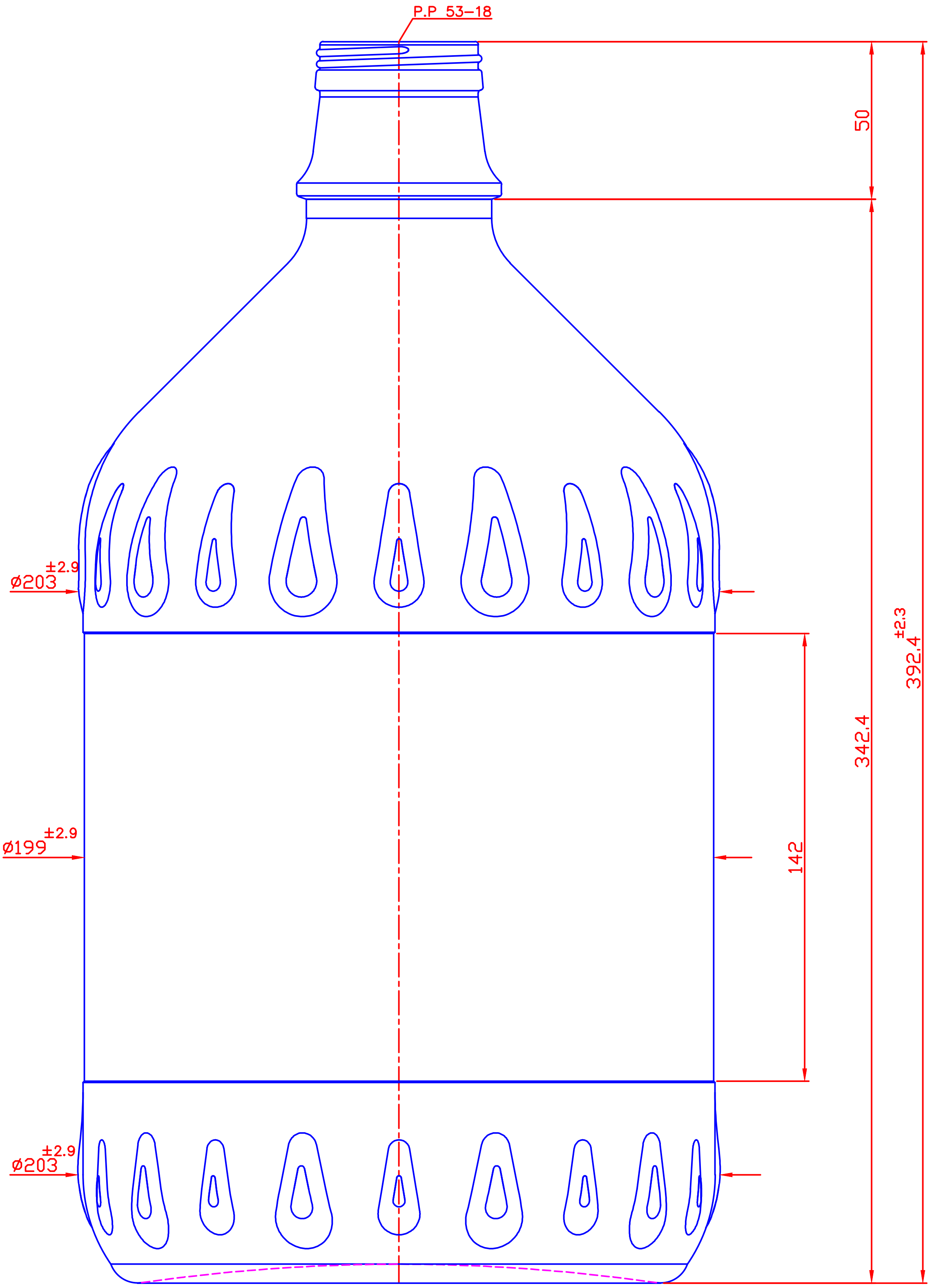

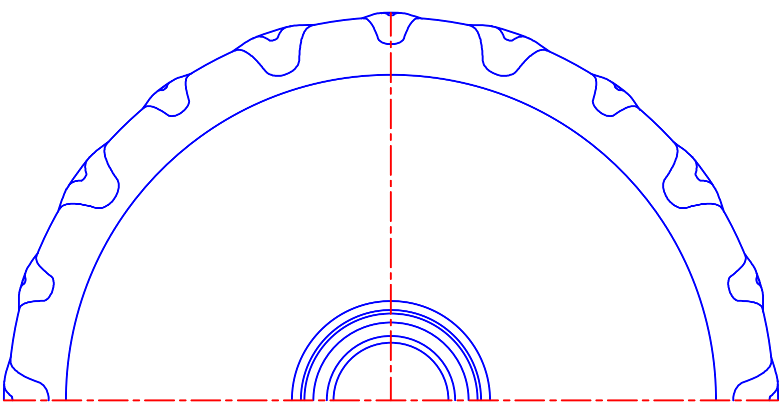

Onay/Customer Approval:

Tarih/Date:

111 9 04 8000

REV NO	AÇIKLAMALAR–EXPLANATIONS	TARİH DATE	YAPAN MADE BY	KONTROL CH'K'D BY

ÇİZEN–DRAWN BY	Bülent	DOLUM HACMİ FILLING CAP. cc.	$8000^{\pm 80}$
KONTROL–CH'K'D BY	EMRAH OKTAYKAN	SLME HACMİ BRIMFULL CAP. cc.	$8130^{\pm 80}$
TARİH–DATE	18.05.2012	AGIRLIK–WEIGHT gr.	~2600

Marmara Cam Sanayi A.Ş.

ÖLÇEK: SCALE: 1/1

I S

VIDALI DAMLA DAMACANA

KALIP NO:–MOULD NO:	ÜRÜN NO:–PRODUCT NO:
01M1388–01	111 9 04 8000