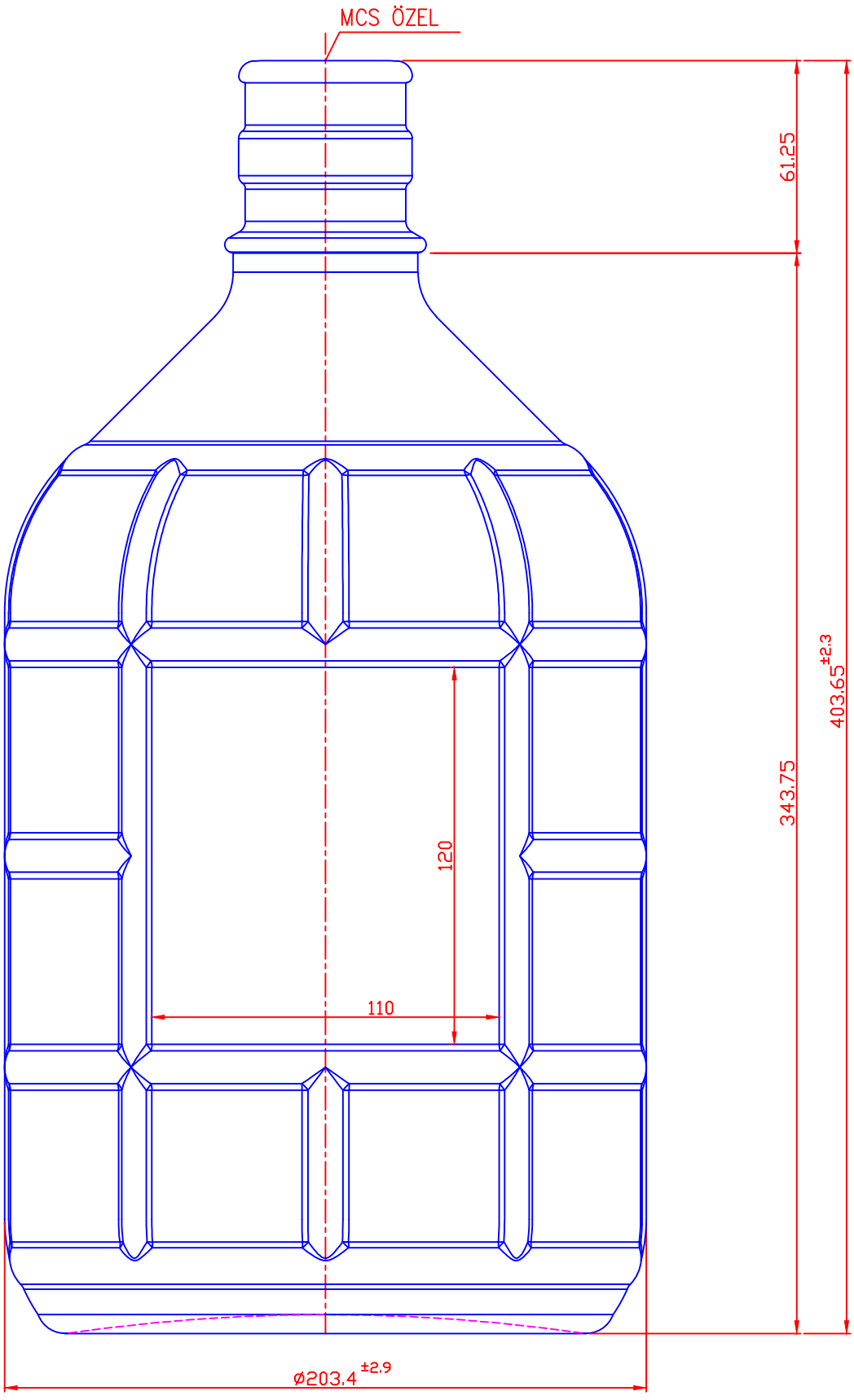


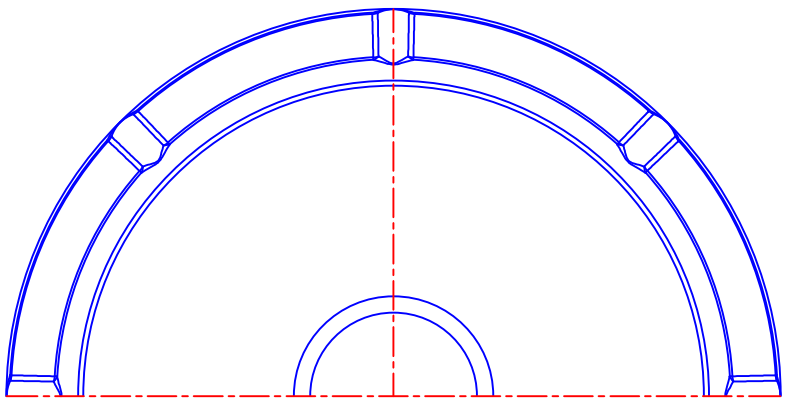

Onay/Customer Approval:

Tarih/Date:

111 9 02 8000

| | | | | |
|---|---|---|---|---|
| REV NO | AÇIKLAMALAR-EXPLANATIONS | TARIH DATE | YAPAN MADE BY | KONTROL CH'K'D BY |
| ÇIZEN-DRAWN BY | Bülent | DOLUM HACMI FILLING CAP. | cc. | 8000 ±80 |
| KONTROL-CH'K'D BY | EMRAH OKTAYKAN | SILME HACMI BRIMFULL CAP. | cc. | 8130 ±80 |
| TARIH-DATE | 18.05.2012 | AGIRLIK-WEIGHT | gr. | ~2600 |
| ÖLÇEK: SCALE: 1/1 | I S DAMA DAMACANA | KALIP NO:-MOULD NO: 01M1389 | ÜRÜN NO:-PRODUCT NO: 111 9 02 8000 | |